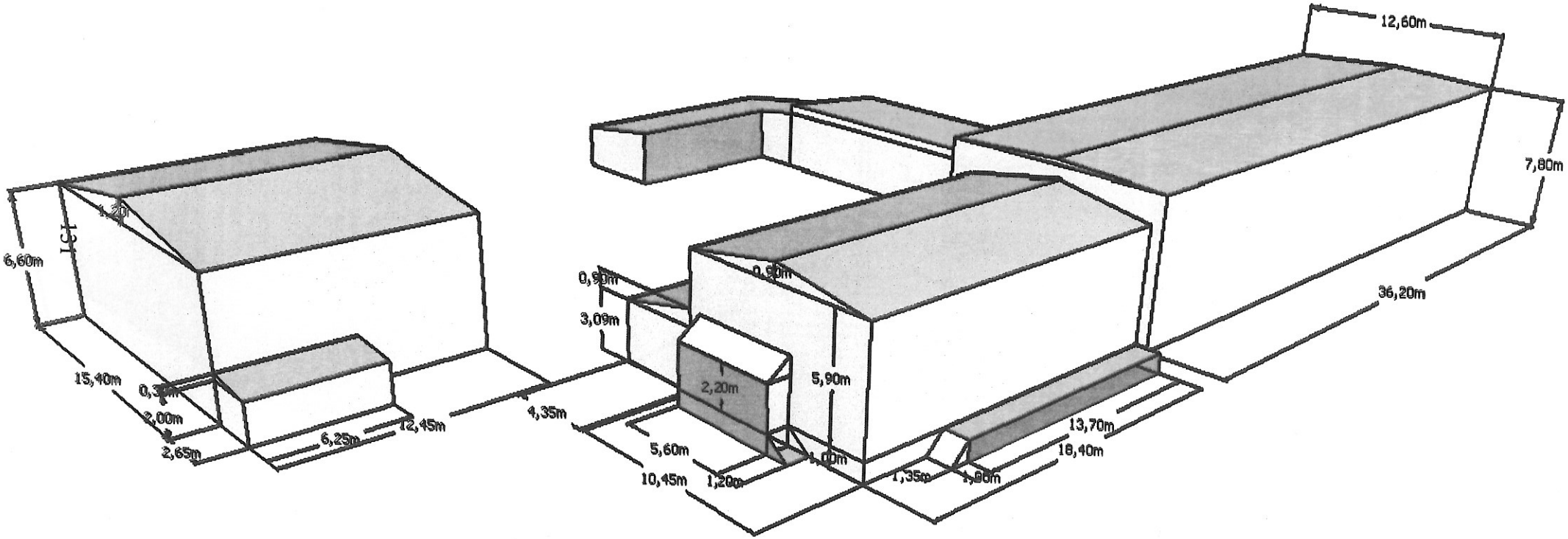
12,60m
7,80m
36,20m
6,60m
1,20m
15,40m
0,30m
2,00m
2,65m
6,25m
12,45m
4,35m
0,90m
3,09m
0,90m
2,20m
5,90m
5,60m
10,45m
1,20m
1,00m
1,35m
1,00m
13,70m
18,40m

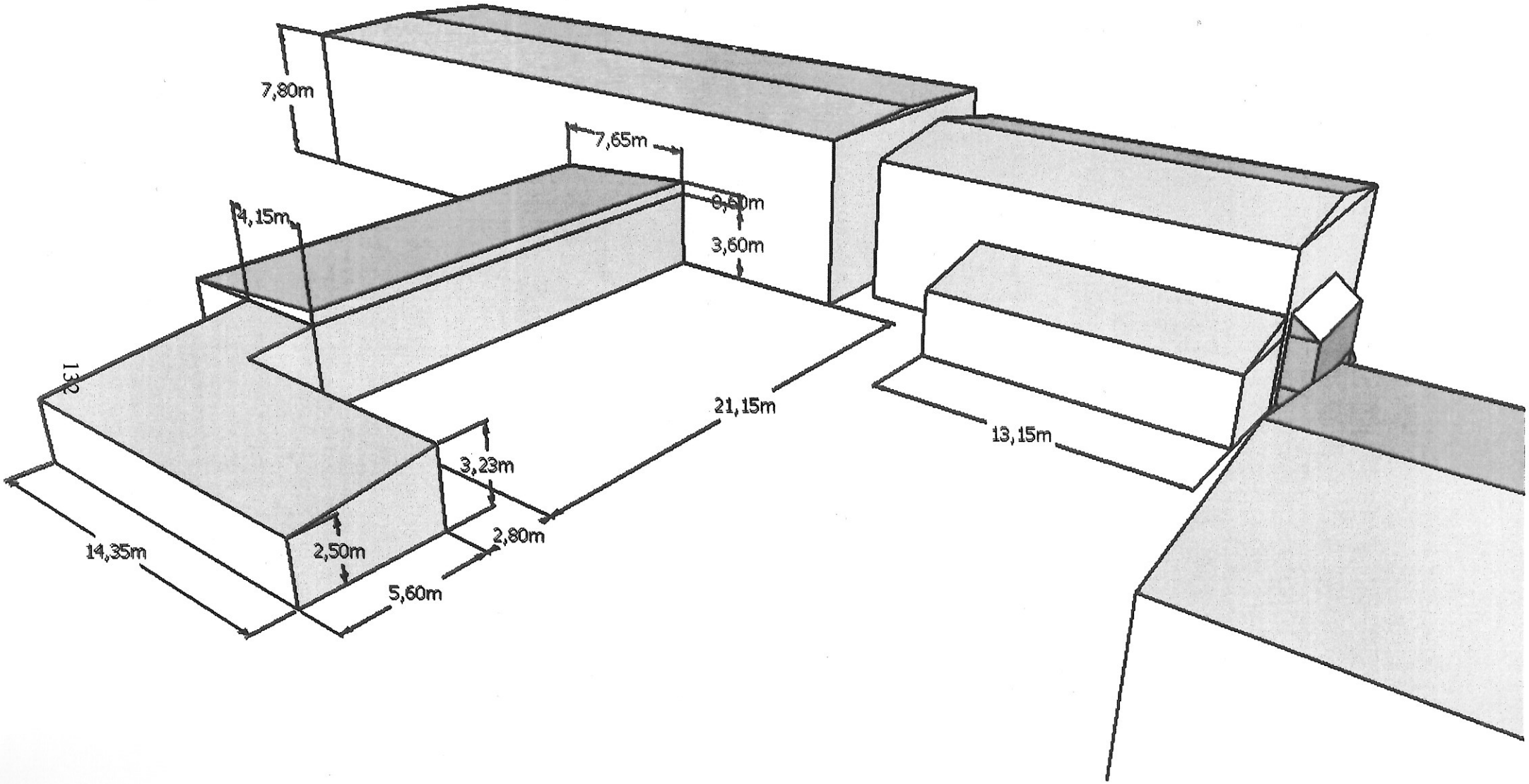
7,80m
7,65m
0,60m
3,60m
4,15m
21,15m
13,15m
3,23m
2,80m
2,50m
5,60m
14,35m

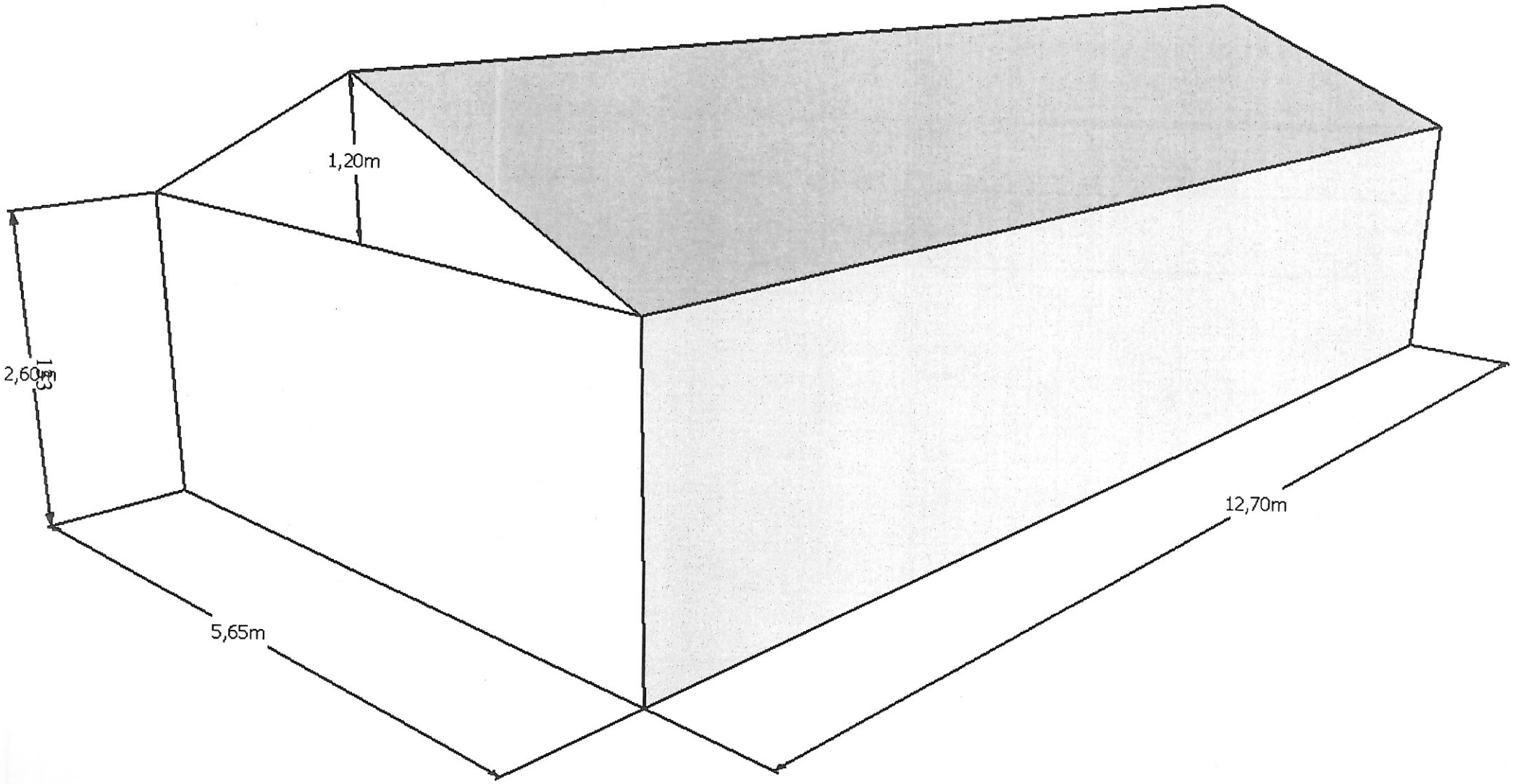
1,20m
2,60m
5,65m
12,70m